इंटरनेट मानक

Disclosure to Promote the Right To Information

Whereas the Parliament of India has set out to provide a practical regime of right to information for citizens to secure access to information under the control of public authorities, in order to promote transparency and accountability in the working of every public authority, and whereas the attached publication of the Bureau of Indian Standards is of particular interest to the public, particularly disadvantaged communities and those engaged in the pursuit of education and knowledge, the attached public safety standard is made available to promote the timely dissemination of this information in an accurate manner to the public.

"जानने का अधिकार, जीने का अधिकार"
Mazdoor Kisan Shakti Sangathan
"The Right to Information, The Right to Live"

"पुराने को छोड नये के तरफ"
Jawaharlal Nehru
"Step Out From the Old to the New"

IS 10363 (1982): Dimensions for fixing devices for threaded back covers for watch cases [PGD 23: Horology]

"ज्ञान से एक नये भारत का निर्माण"
Satyanarayan Gangaram Pitroda
"Invent a New India Using Knowledge"

Act Number 22 of 2005
The Indian Parliament
RIGHT TO INFORMATION

Made Available By
Public.Resource.Org

"ज्ञान एक ऐसा खजाना है जो कभी चुराया नहीं जा सकता है"
Bhartṛhari—Nītiśatakam
"Knowledge is such a treasure which cannot be stolen"

BLANK PAGE

BRUTUM FULMEN

IGNORANTIA JURIS NON EXCUSAT

PROTECTED BY COPYRIGHT

UDC 681·11·036-218 : 066·76

Indian Standard

(Reaffirmed - 2012)

DIMENSIONS FOR FIXING DEVICES FOR THREADED BACK COVERS FOR WATCH CASES

1. Scope — Gives the main dimensions of the following types of fixing devices for threaded back covers :

Type A : Notch type back cover.

Type B : Flange type back cover.

2. Terminology

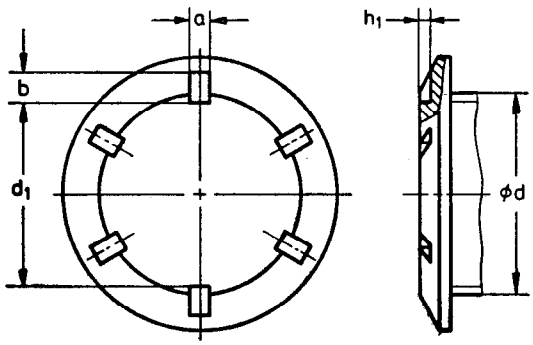

FIG. 1 TYPE A

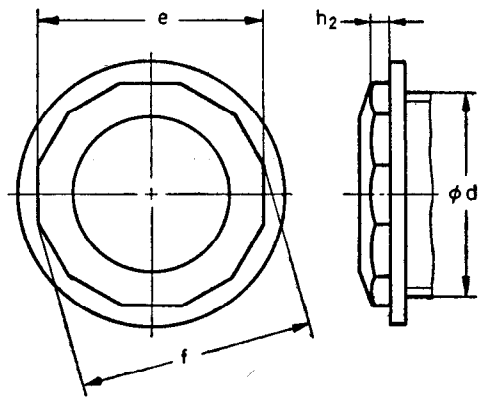

FIG. 2 TYPE B

a = Notch width

b = Notch length

d_1 = Dimension across notches

h_1 = Notch depth.

e = Dimension across flats

f = Dimension across corners

h_2 = Flange height

d = Thread diameter (nominal)

Adopted 30 December 1982

© April 1983, ISI

Gr 1

INDIAN STANDARDS INSTITUTION
MANAK BHAVAN, 9 BAHADUR SHAH ZAFAR MARG
NEW DELHI 110002

Horology Sectional Committee, EDC 82 [Ref : Doc : EDC 82 (3727)]

3. Dimensions

3.1 *Type A* (*see* Fig. 1)

All dimensions in millimetres.

a $^{+0{\cdot}20}_{0}$	1·20	1·60	2·00
h_1	0·60 *Min*		
b	1·00 *Min*		
d_1 $^{0}_{-0{\cdot}10}$	15·00 to 22·00 in steps of 0·50 23·00 to 32·00 in steps of 1·00		

3.2 *Type B* (*see* Fig. 2)

All dimensions in millimetres.

No. of Flanges	e $^{0}_{-0{\cdot}05}$	f	h_2
10	16·00 to 22·00 in steps of 0·50 23·00 to 36·00 in steps of 1·00	1·051 e	0·60 *Min*
12	25·00 to 36·00 in steps of 1·00	1·035 e	
14	30·00 to 36·00 in steps of 1·00	1·026 e	

EXPLANATORY NOTE

This standard is one of a series of Indian Standards relating to wrist watch cases.

In the preparation of this standard, assistance has been derived from the following:

NIHS 60-31 : 1964 Boîtes étanches — Fonds vissés a 10, 12 ou 14 pans Normes De L'Industrie Horlogere Suisse.

NIHS 60-32 : 1964 Boîtes tanches — Fonds vissés a 6 encoches Normes De L' Industrie Horlogere Suisse.

Printed at Delhi Printers, Delhi, India